Quasar Q221S

SKU Number: Q221S-SUB-0000-8695

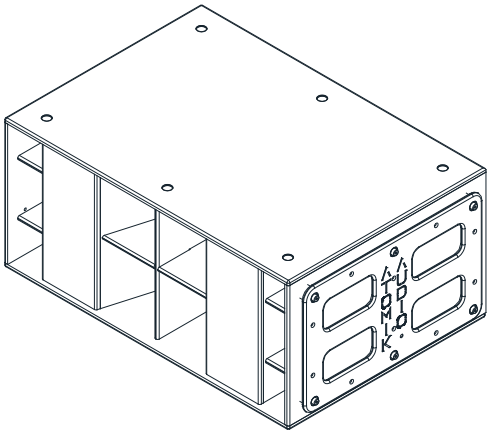

Description

The Atomik Q221S is an ultra-powerful infra sub-bass loudspeaker, engineered to deliver exceptional subsonic performance.
Designed for large concert venues and nightclubs, it offers very high acoustical output, ensuring deep, impactful bass reproduction.
Featuring dual 4.5-inch voice coils and an 8000-watt peak power handling capacity, the Q221S is built for maximum efficiency and reliability.
Its low-noise forced air cooling system enhances thermal management, allowing sustained high-performance operation under demanding conditions.With industry-leading output and precision-engineered acoustics, the Q221S is designed to outperform rival subwoofers, making it an ideal choice for high-intensity sound reinforcement applications.

Features

- Subwooofer with incredible SPL levels.
- 18” drivers ith 4.5” voice coils.
- Dual Neutrik NL4 speakon connectors.
- Heavy duty 18mm marine plywood enclosure.
- Perfectly suited for large discos or Live performances.

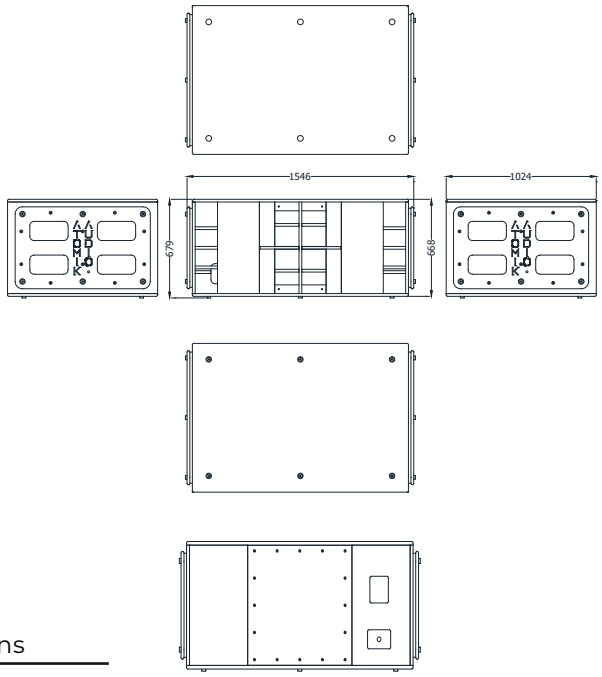

Dimensions in mm

Technical specifications

- Sub Driver - 18” neodymium sub driver with dual 4.24 voice coils.
- Enclosure - Bandpass / Hornloaded
- Axial Sensitivity - 104dB @ 1w/1m
- Max SPL - 148.2 dB Peak SPL (Measured - AES75-2022 M-Noise)
  148.4 dB Peak SPL inf (Measured - AES75-2022 M-Noise)
- Power - Max 3600 watts long term continuous / Peak 8000 watts
- Nominal Impedance - 4 ohms passive
- Minimal Impedance - 3.0 ohms @ 59 Hz
- Frequency Response - -3dB 34Hz to 100Hz
- Dimensions in mm & in WxHxD - 1546mm x 679mm x 1024mm, 60.86" x 26.73" x 40.31
- Weight - 115kgs / 253lbs

Accessories

- Wheel Board
- Rain Cover

Applications

Rental
Touring
HOW
Nightclubs & Discotheques
Auditoriums
Concerts